Antennas + Mics – Tech Booth Setup

Mic Banks

Top Bank: Singing Mics

Middle Bank: Bodypacks

Bottom Bank: Speaker Mics

*Middle power supply supplies power to Middle and Bottom Banks. Splitters also supply direct power to each receiver.

Antenna Wiring

Top and Middle Bank Antenna wiring (full diversity, 2 antennas, 8 receivers)

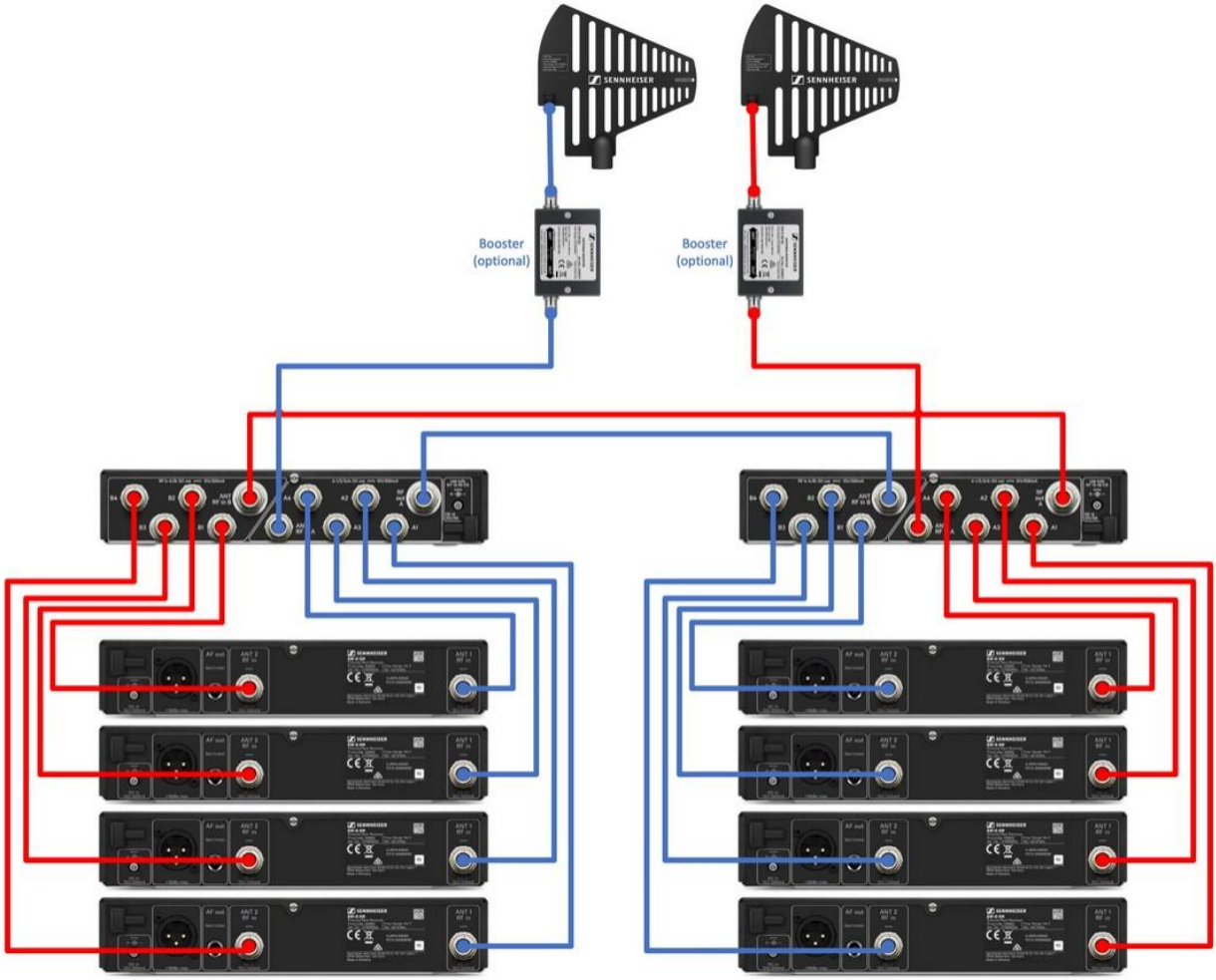

*Bottom Bank receives full diversity across two directly connected antennas.
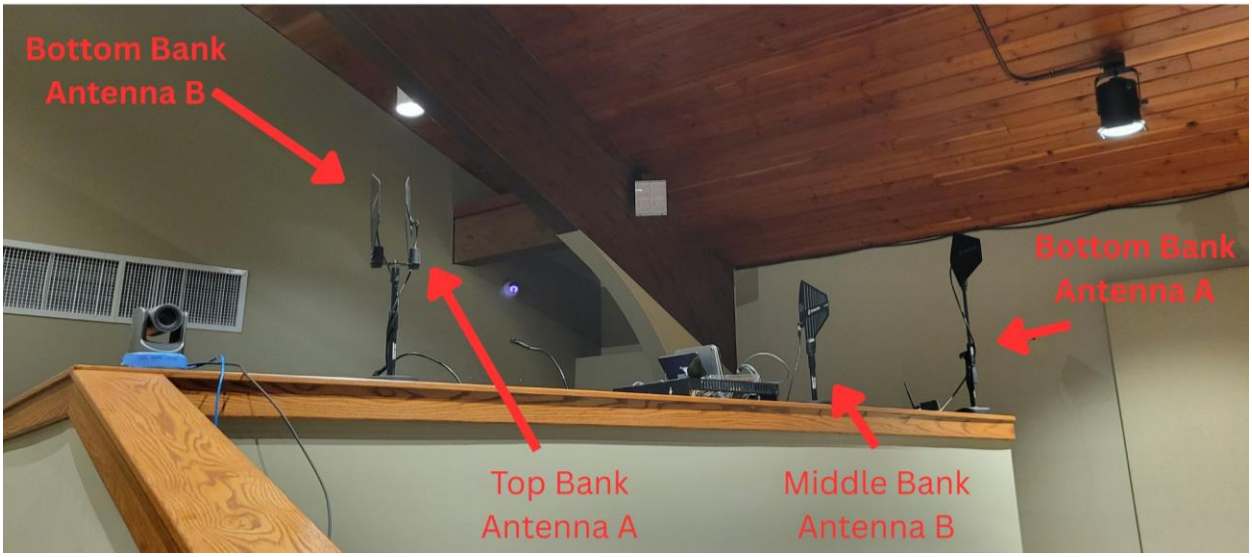
Antenna distribution/connections: